Skonaren VEGA

NORDIC Class BOATS
by www.atlastmodels.se

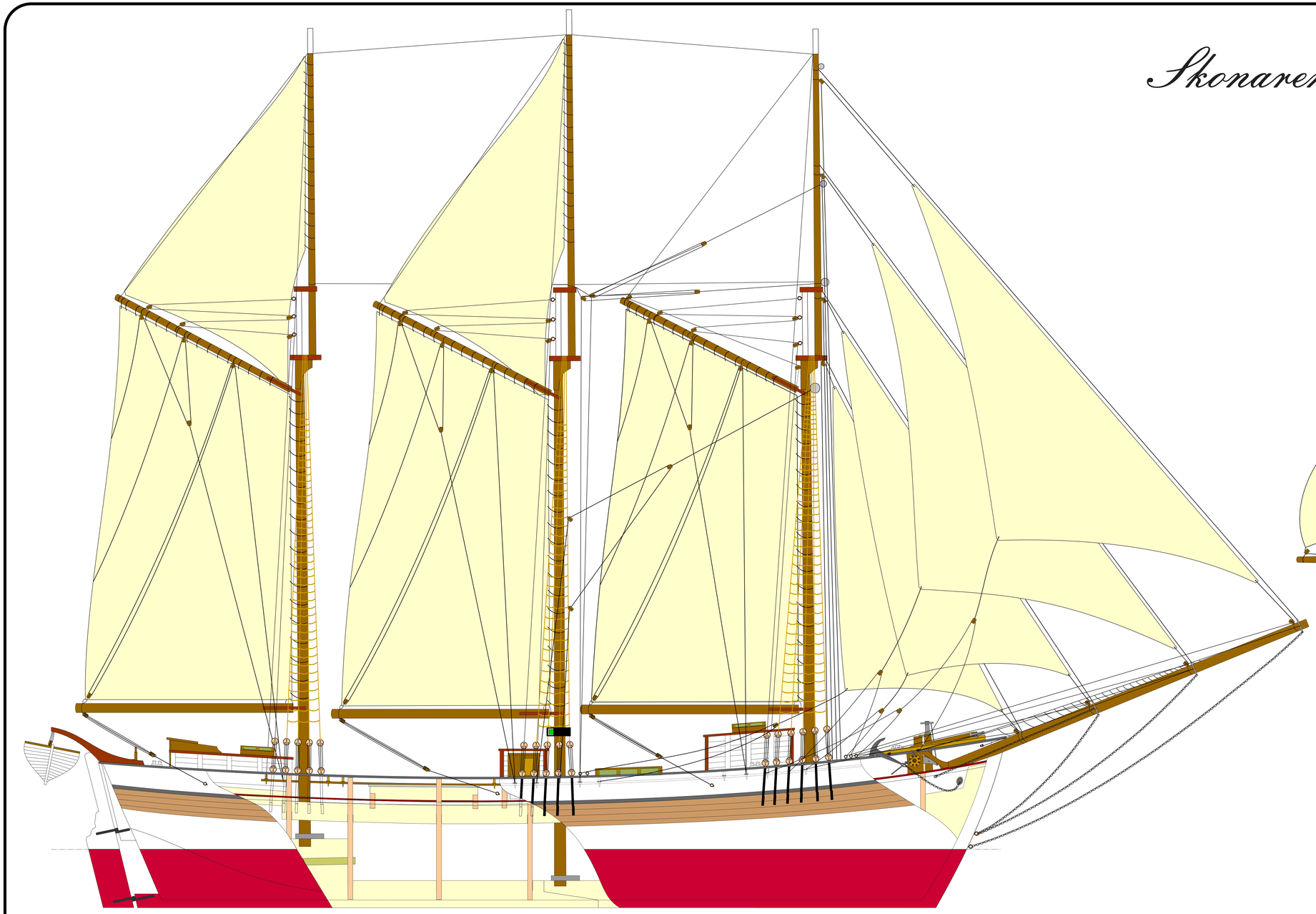

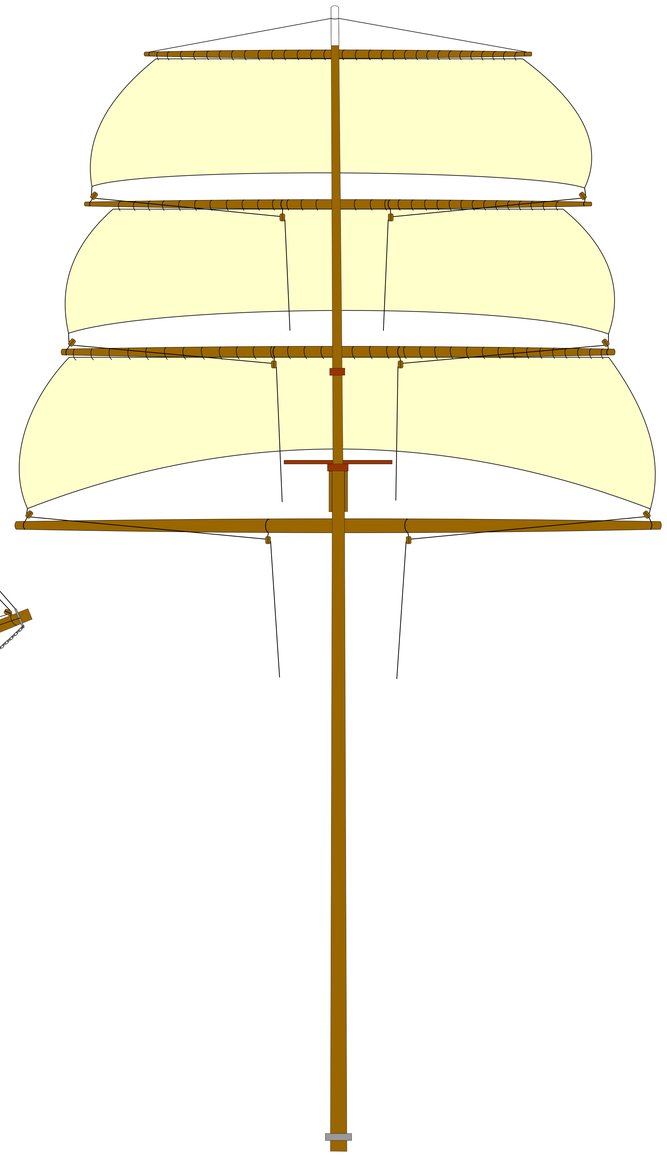

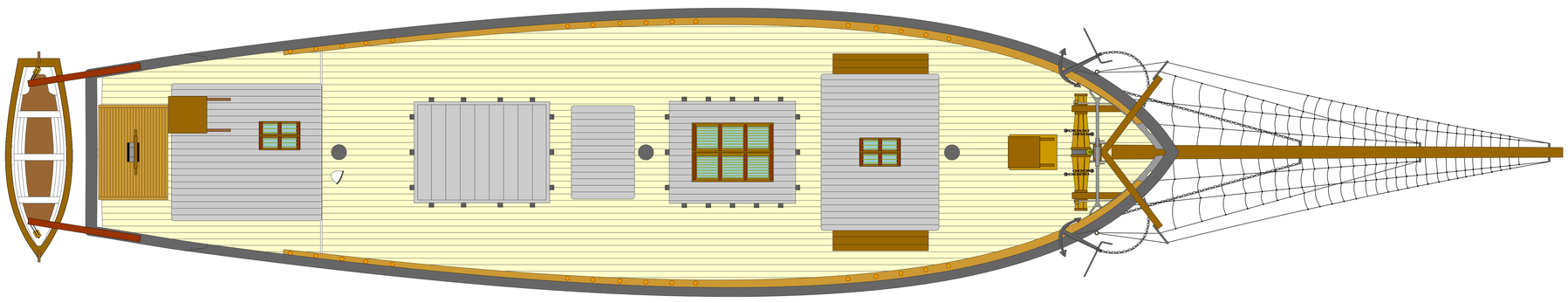

1

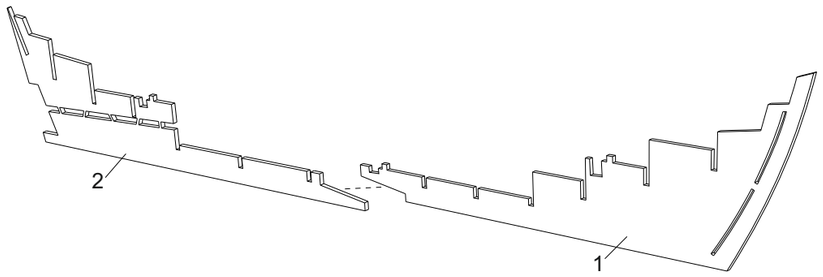

2

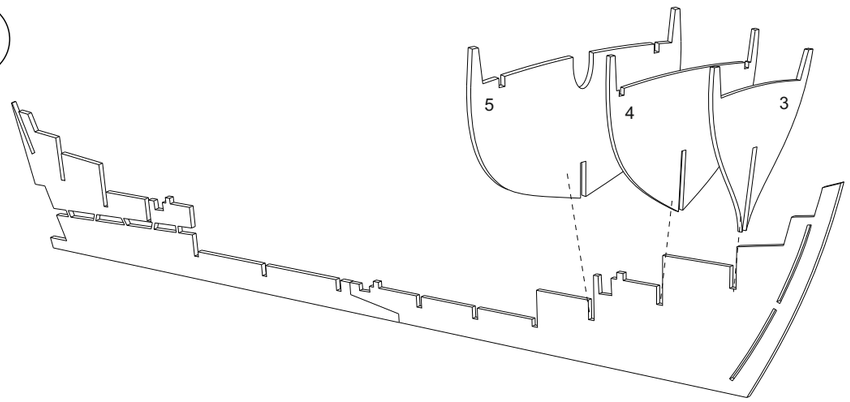

3

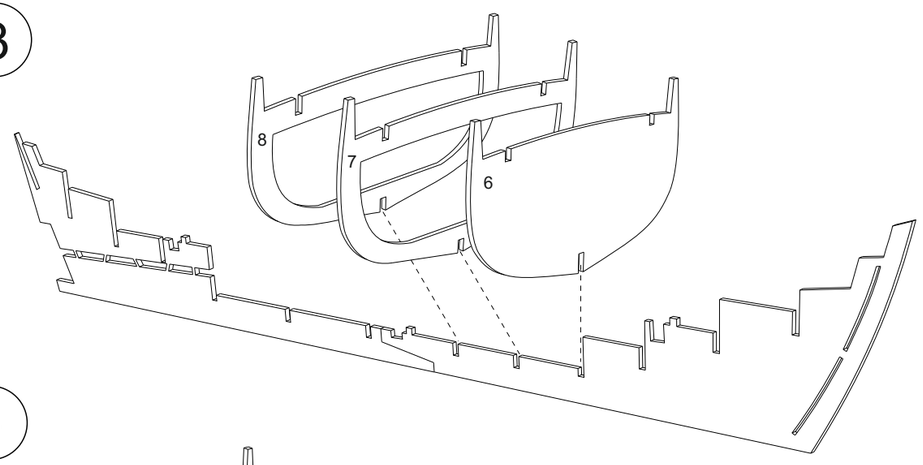

4

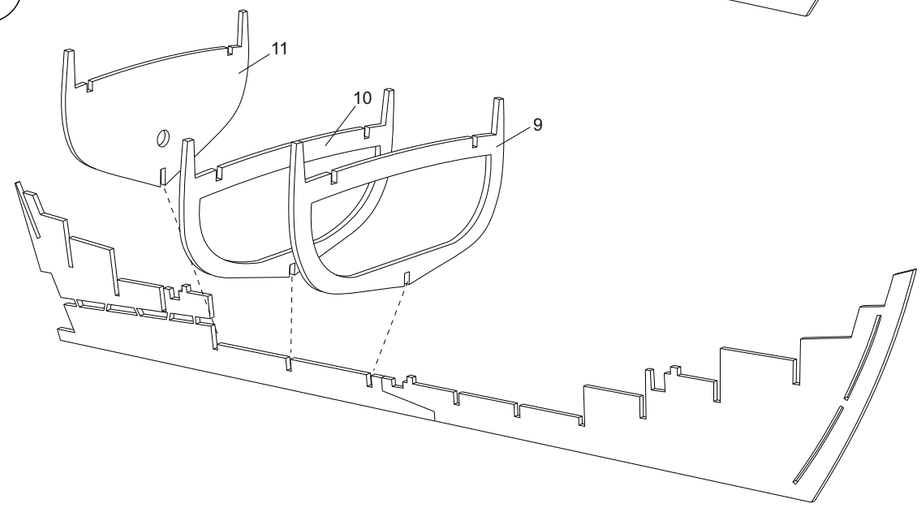

5

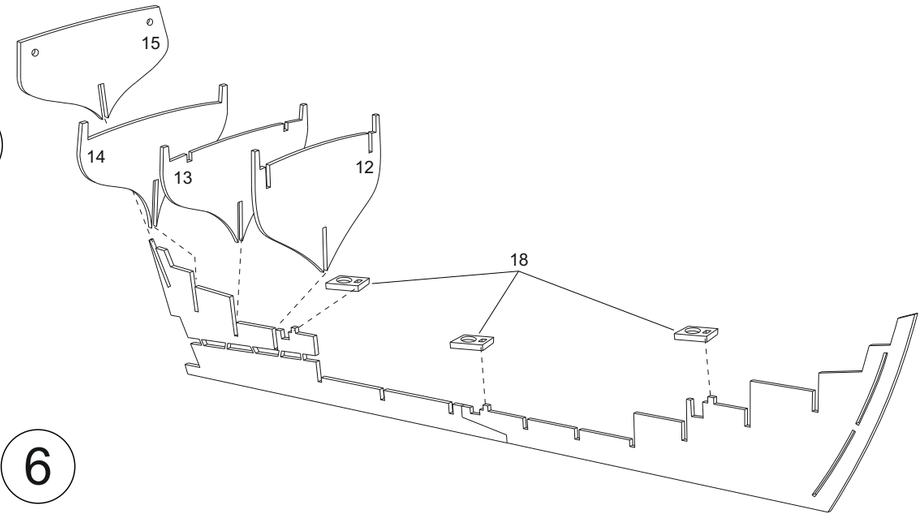

6

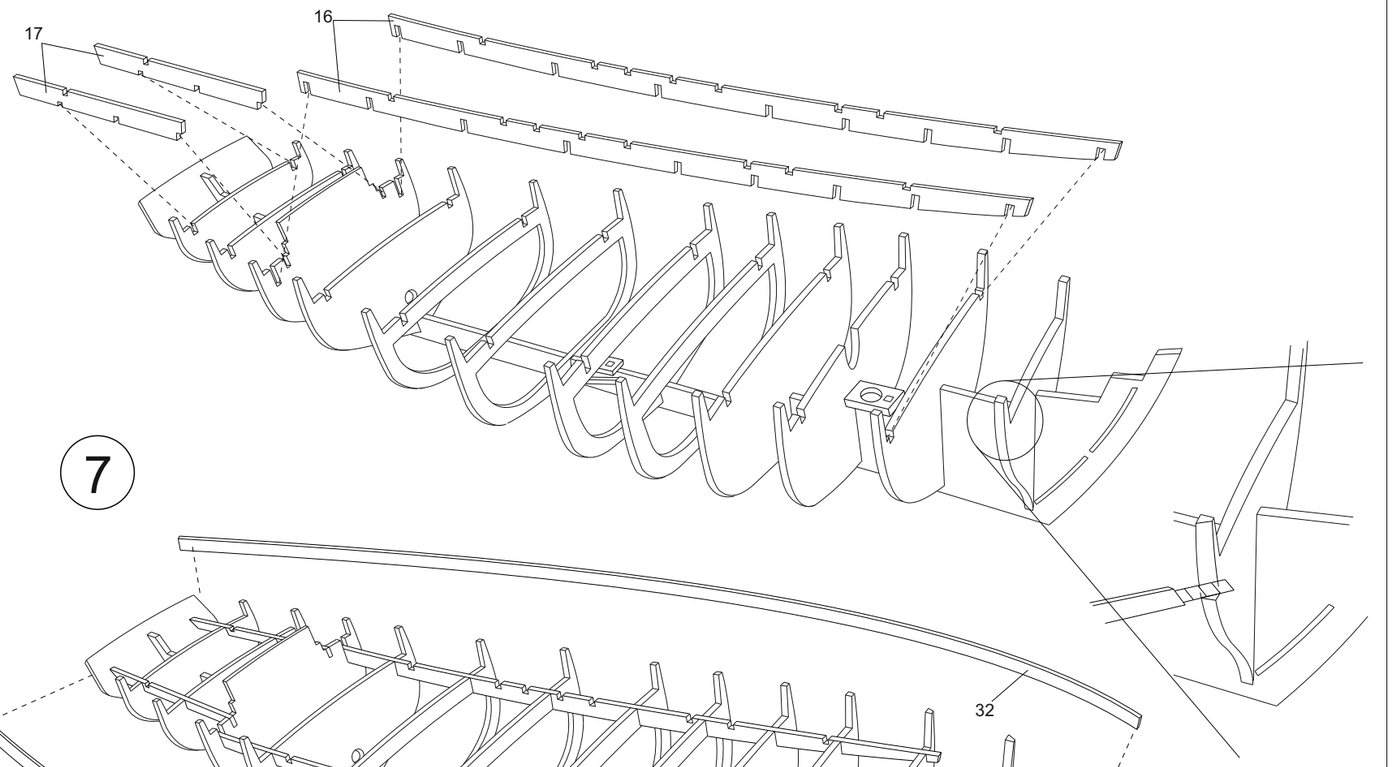

7

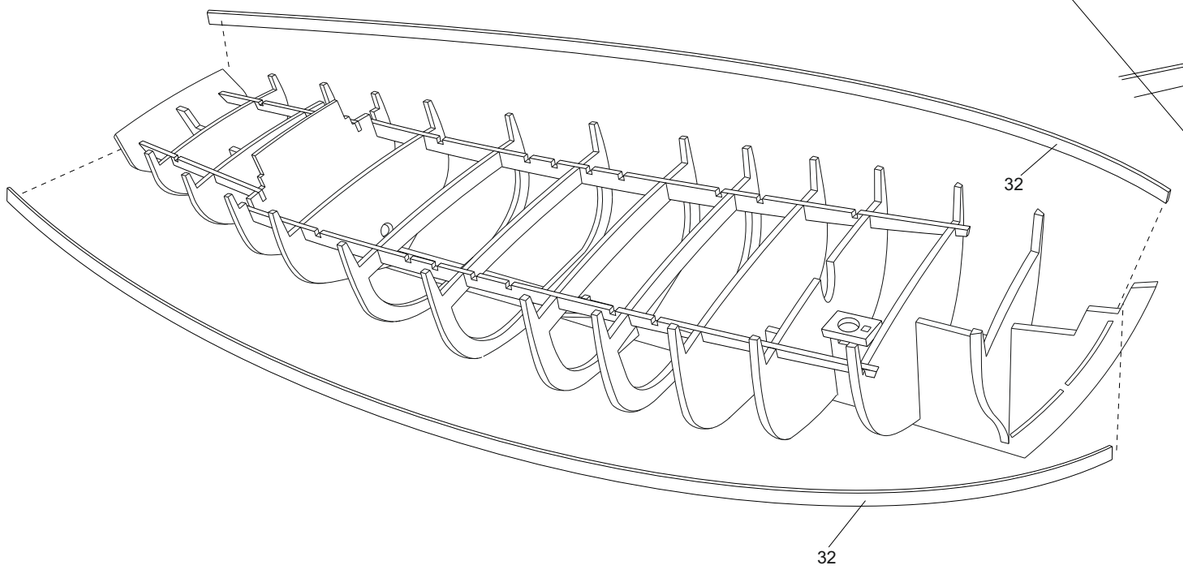

Vega

8

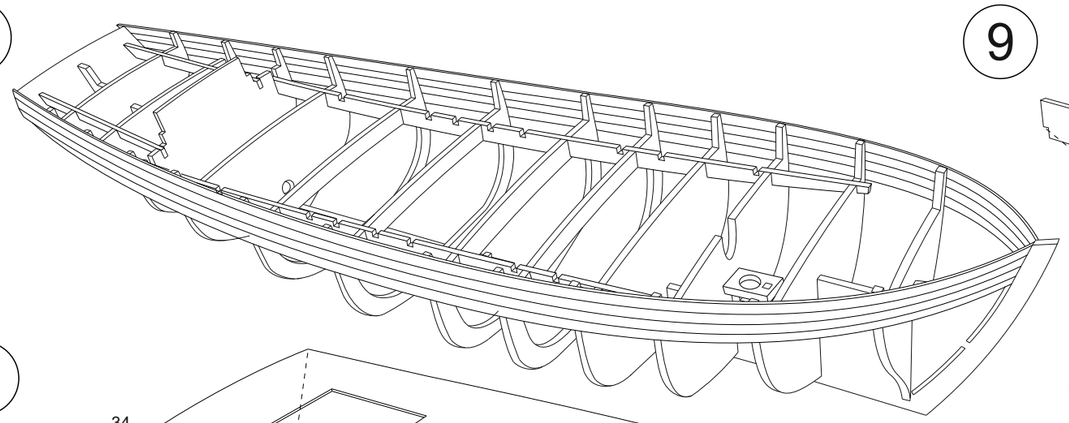

9

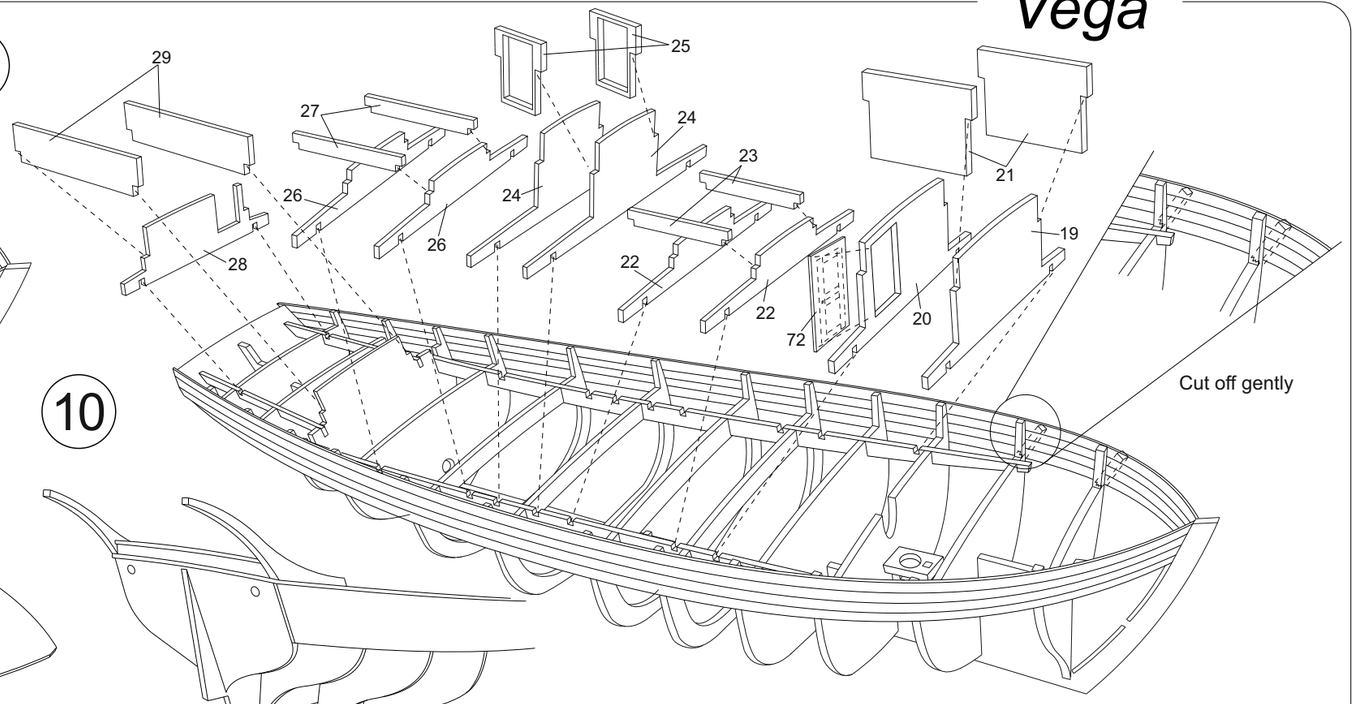

11

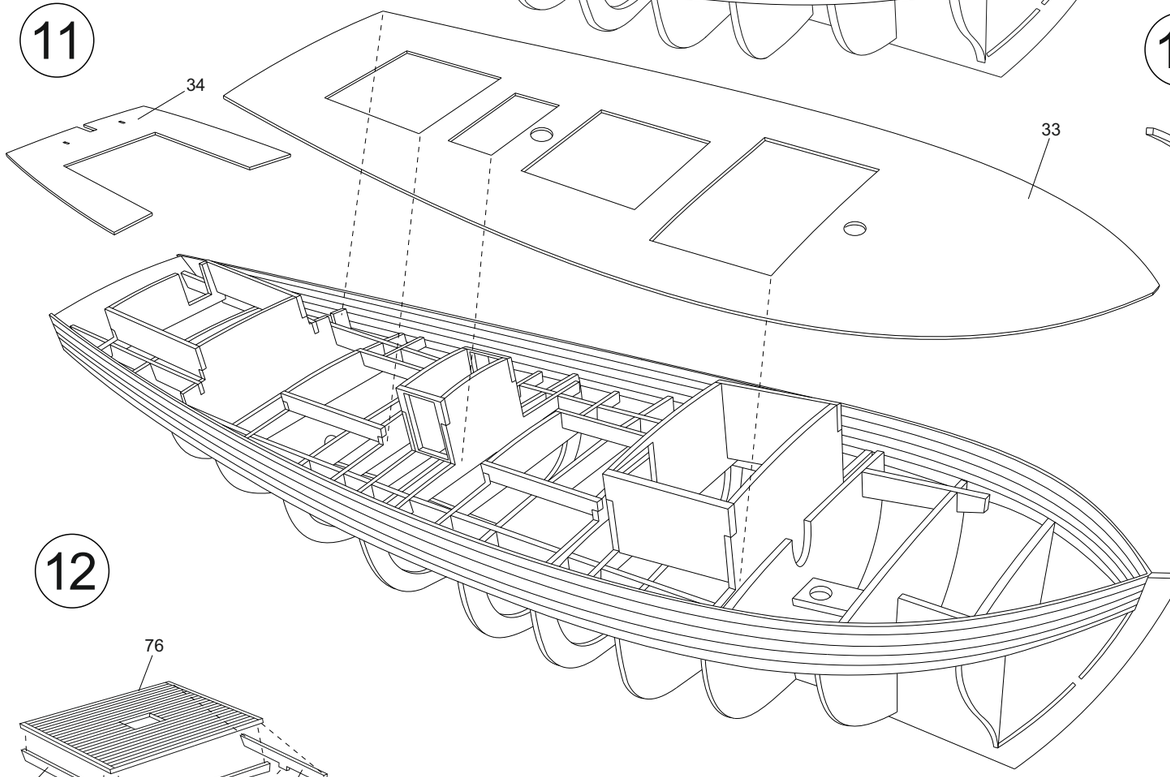

10

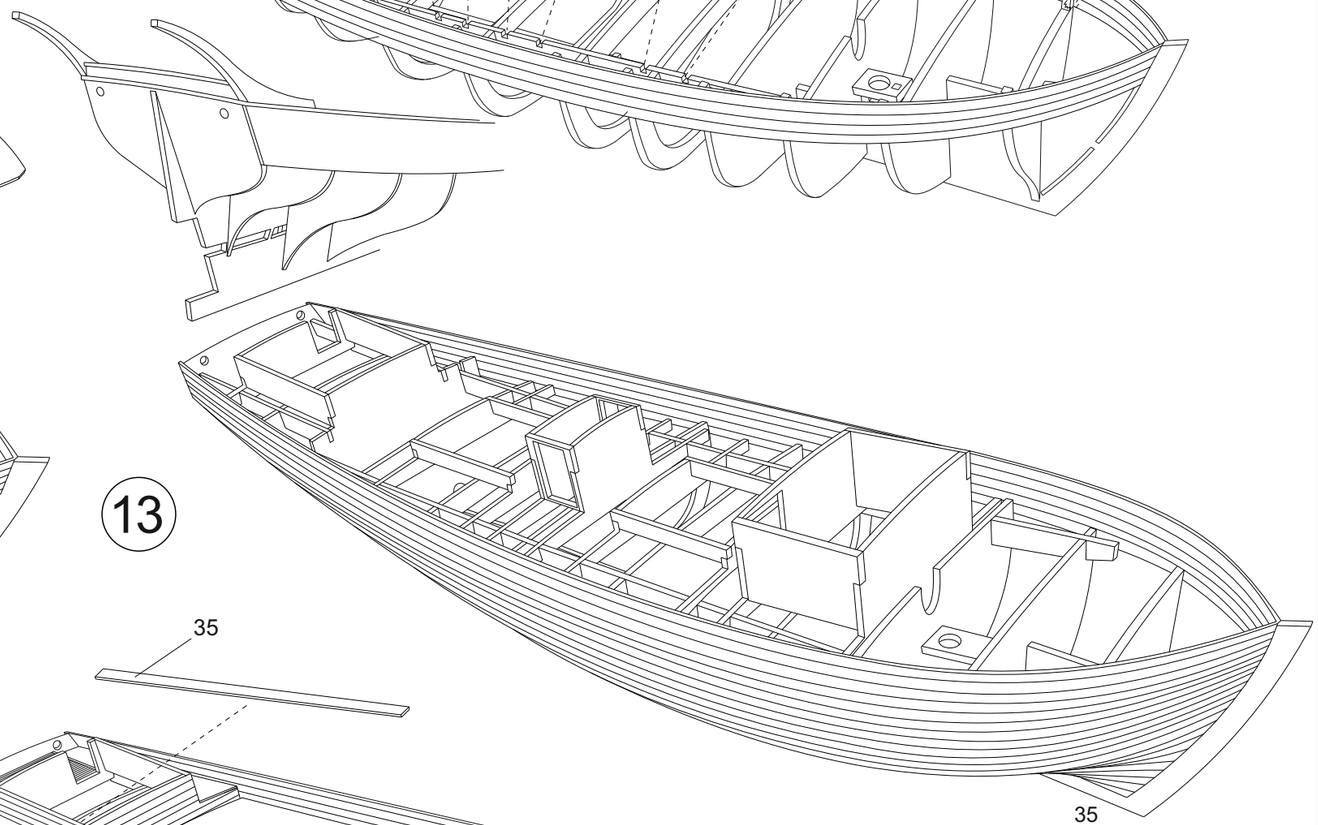

12

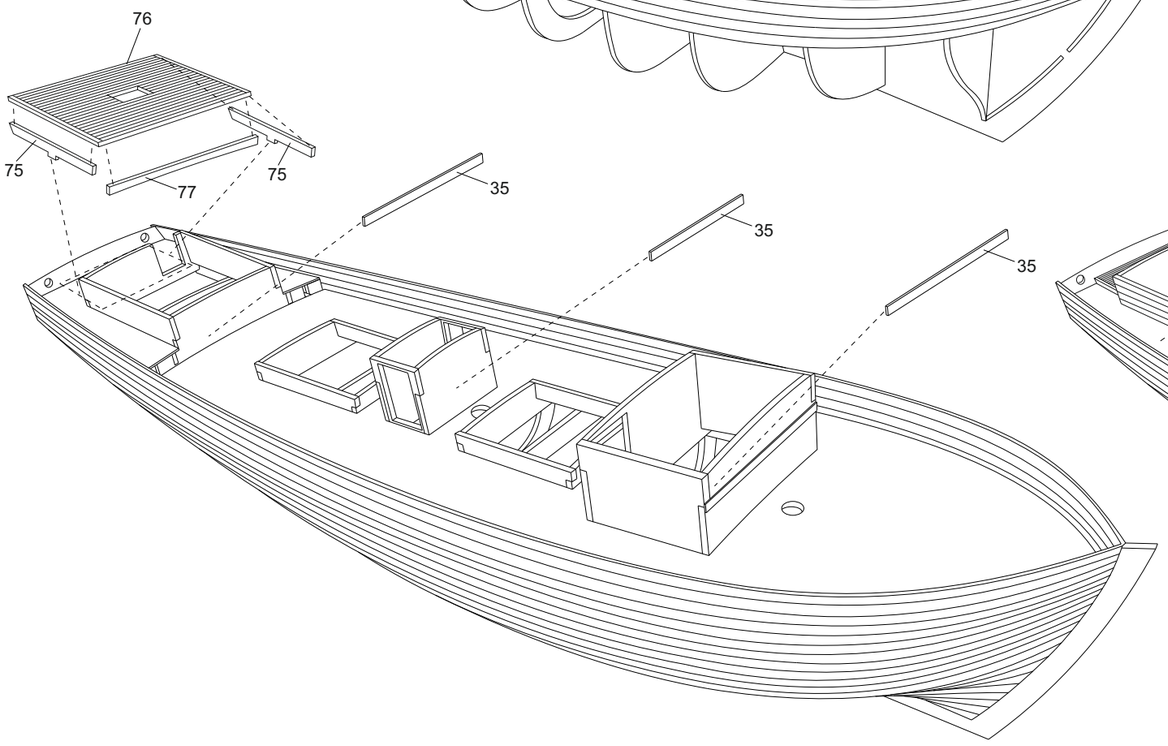

13

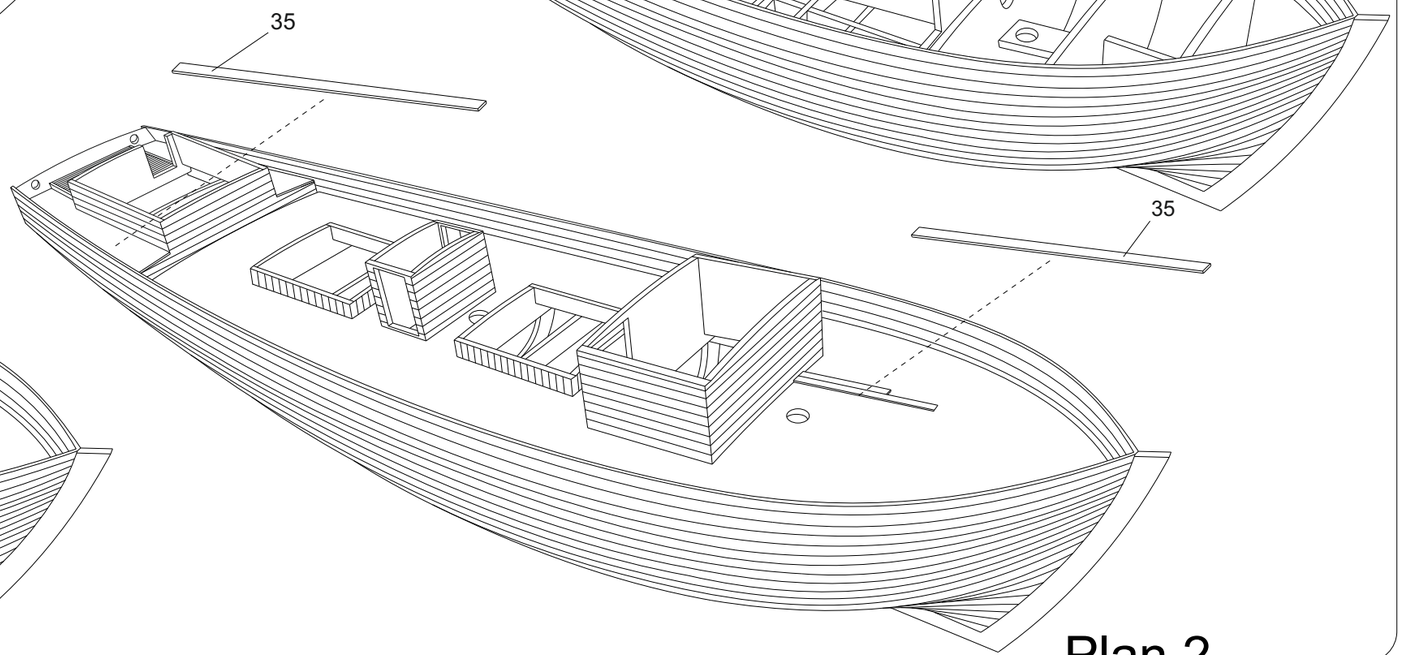

Plan 2

14

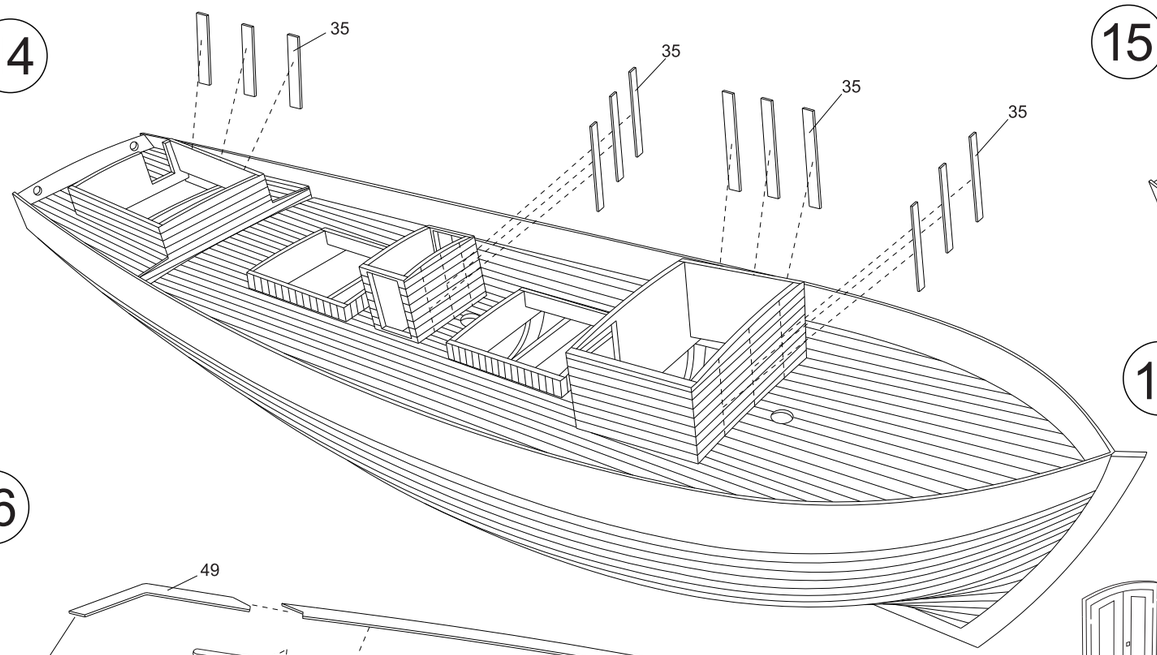

15

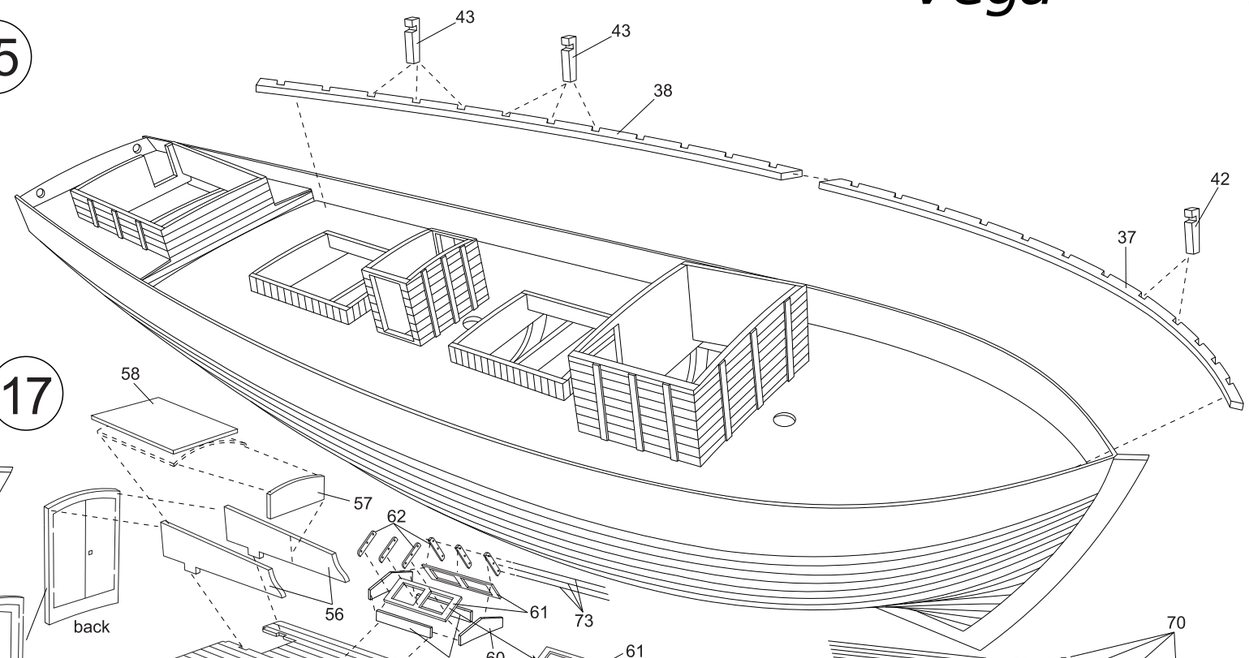

16

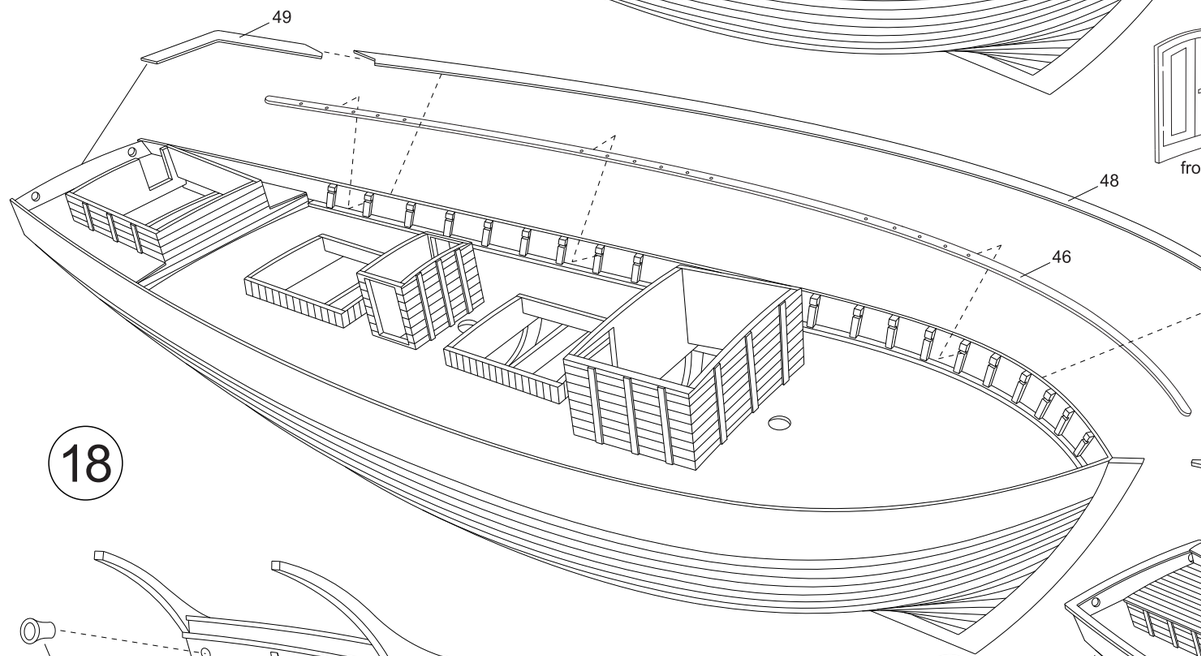

17

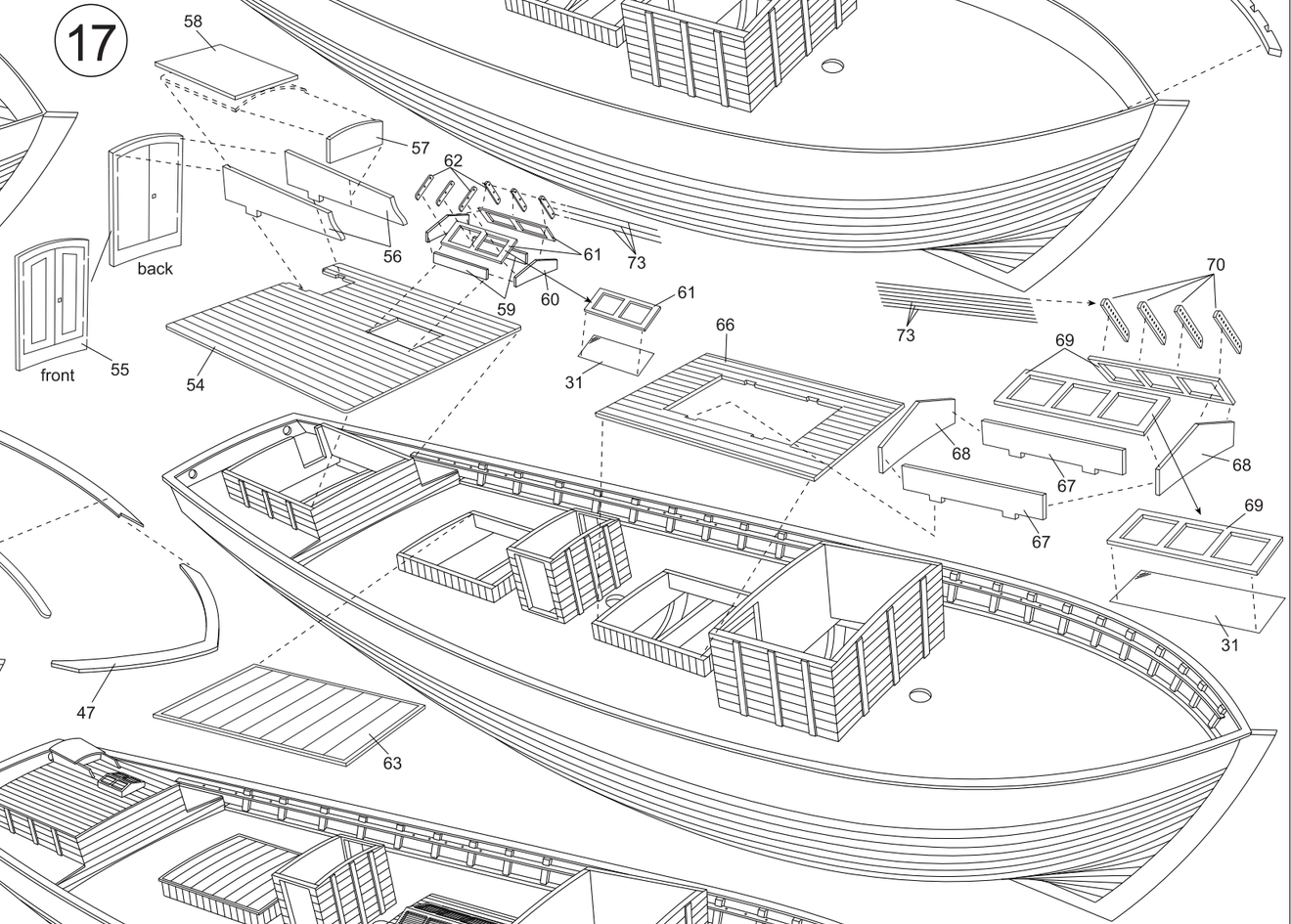

18

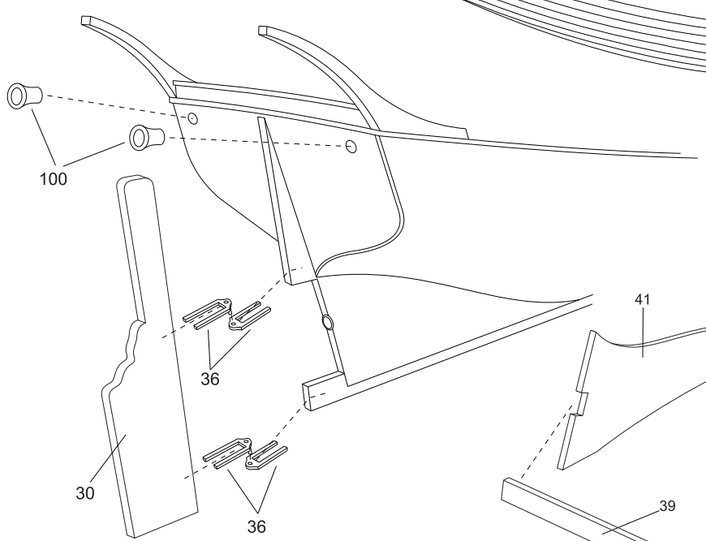

19

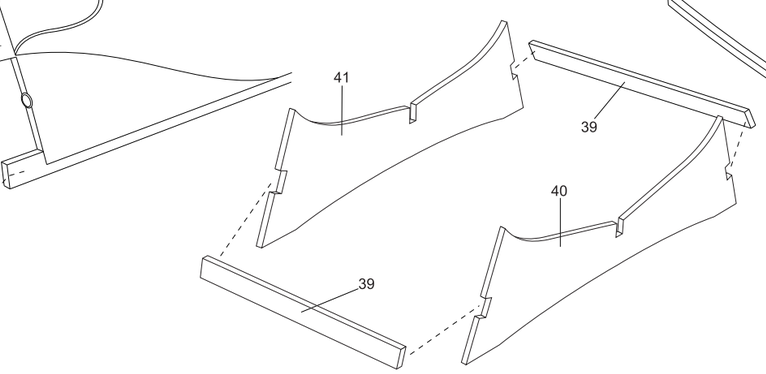

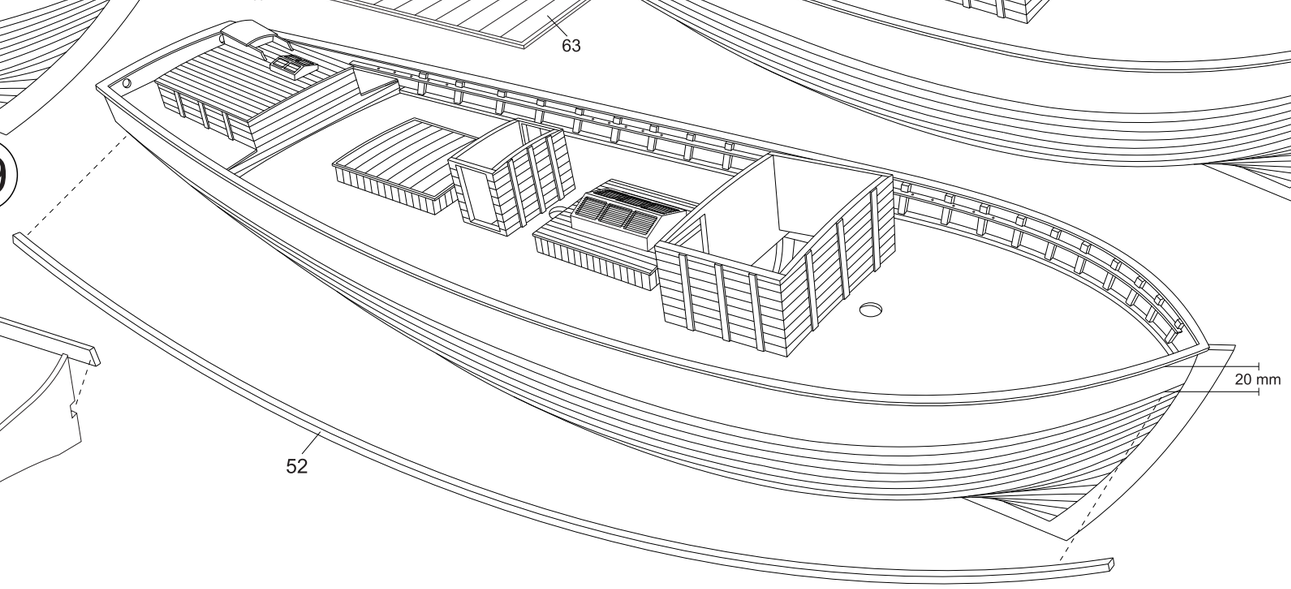

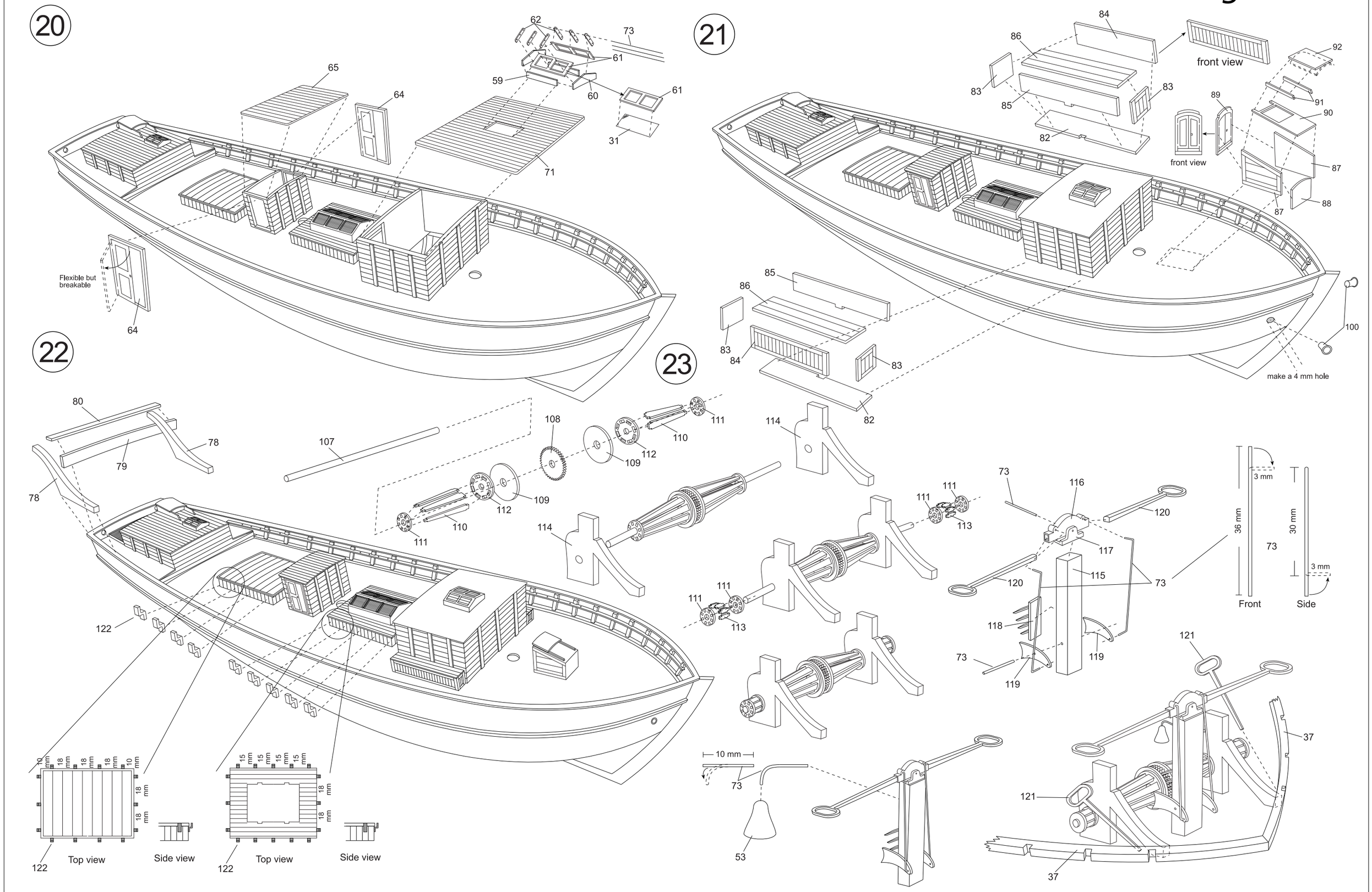
20
21
22
23
Flexible but breakable
front view
front view
make a 4 mm hole
Top view
Side view
Top view
Side view
10 mm
3 mm
36 mm
30 mm
Front
Side

Vega

24

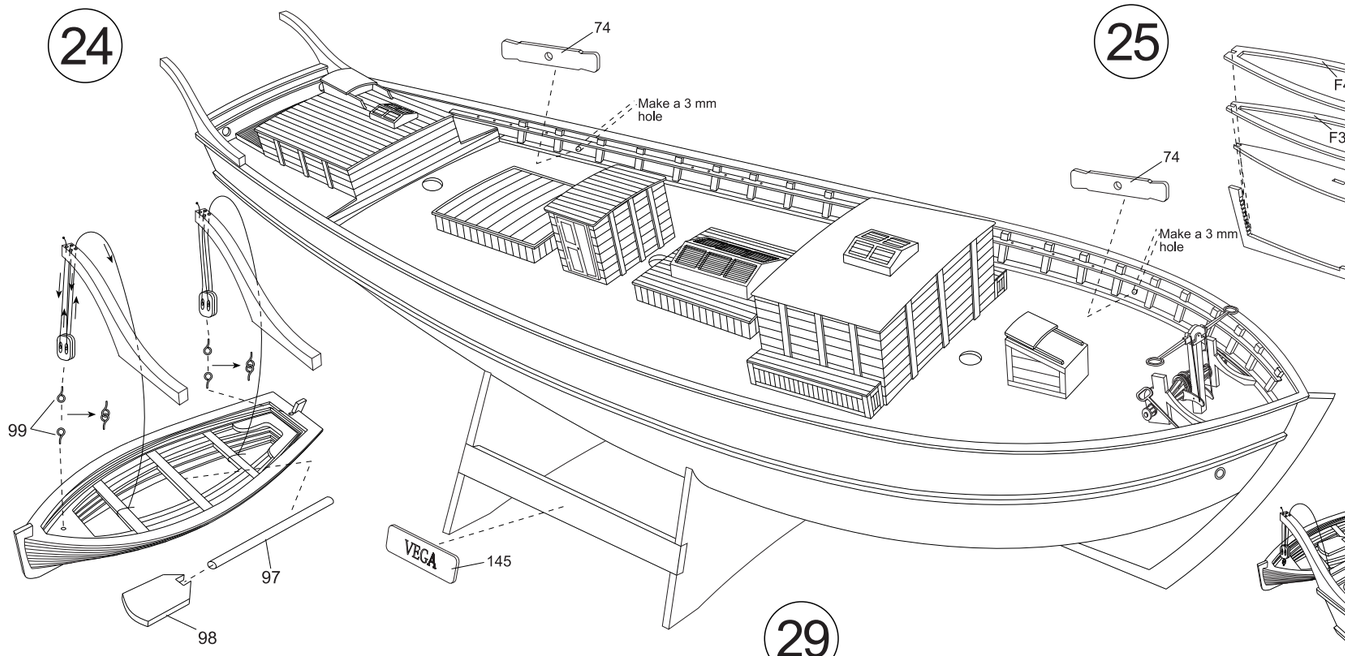

25

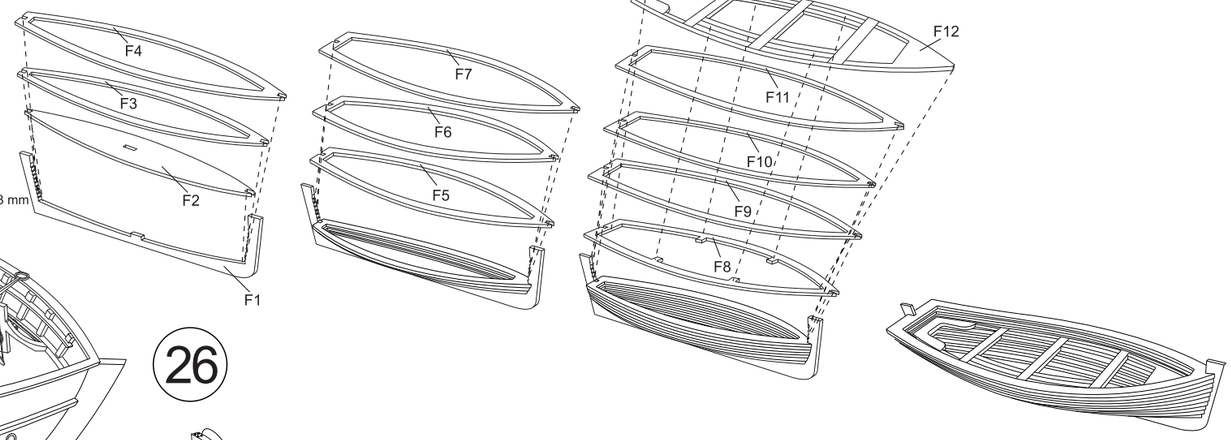

26

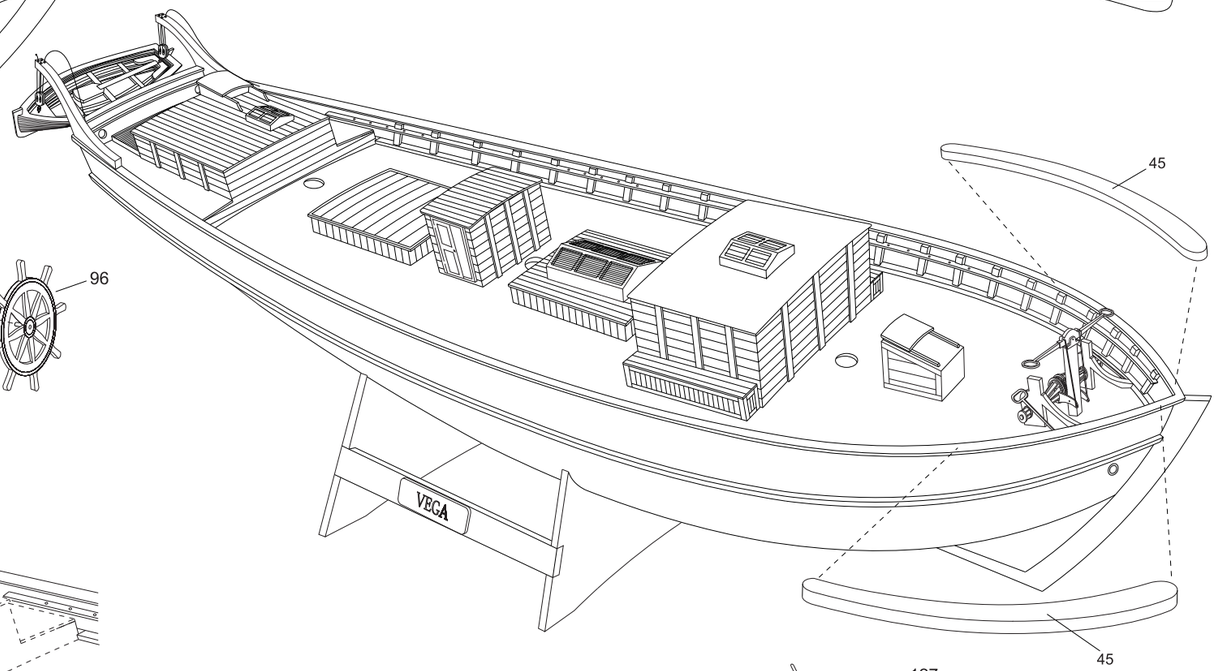

27

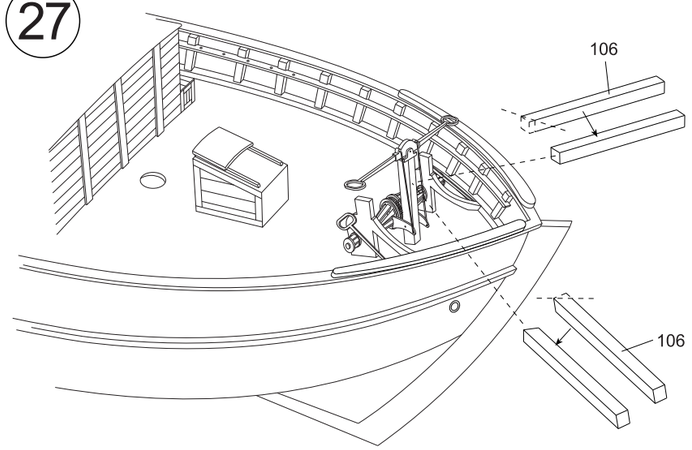

28

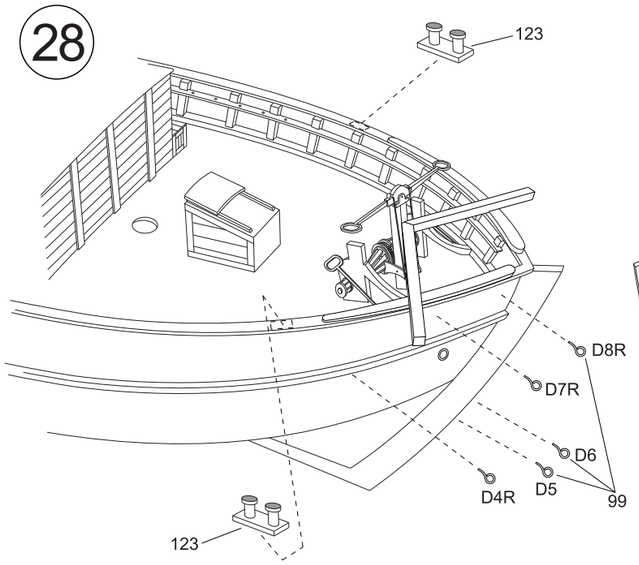

29

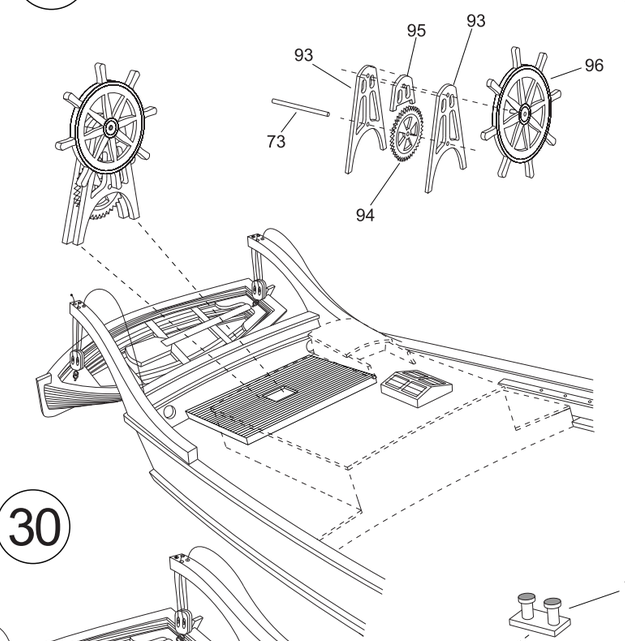

30

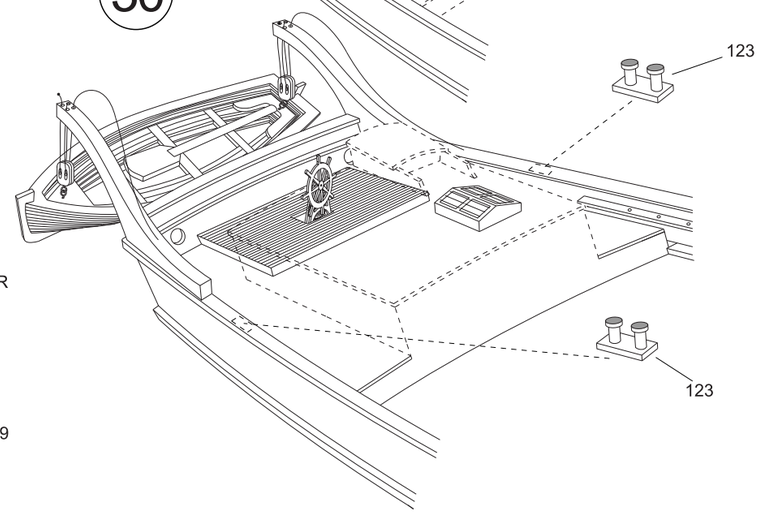

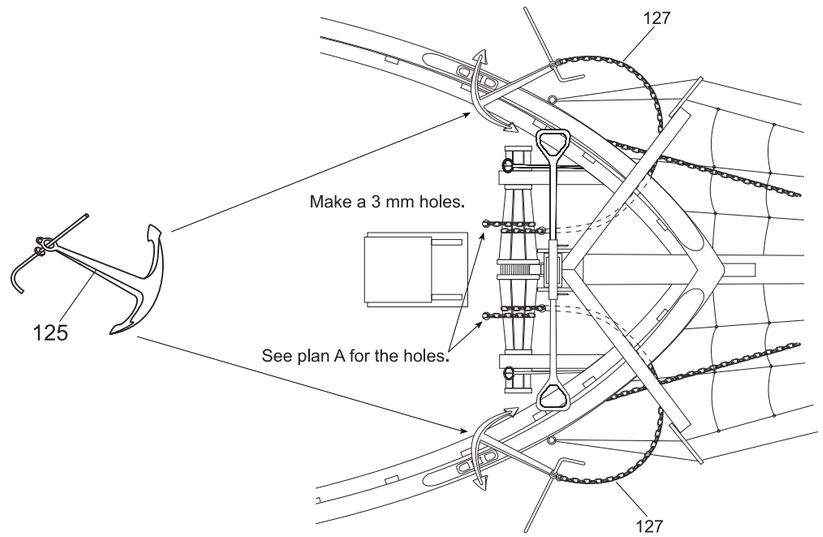

Plan 5

31

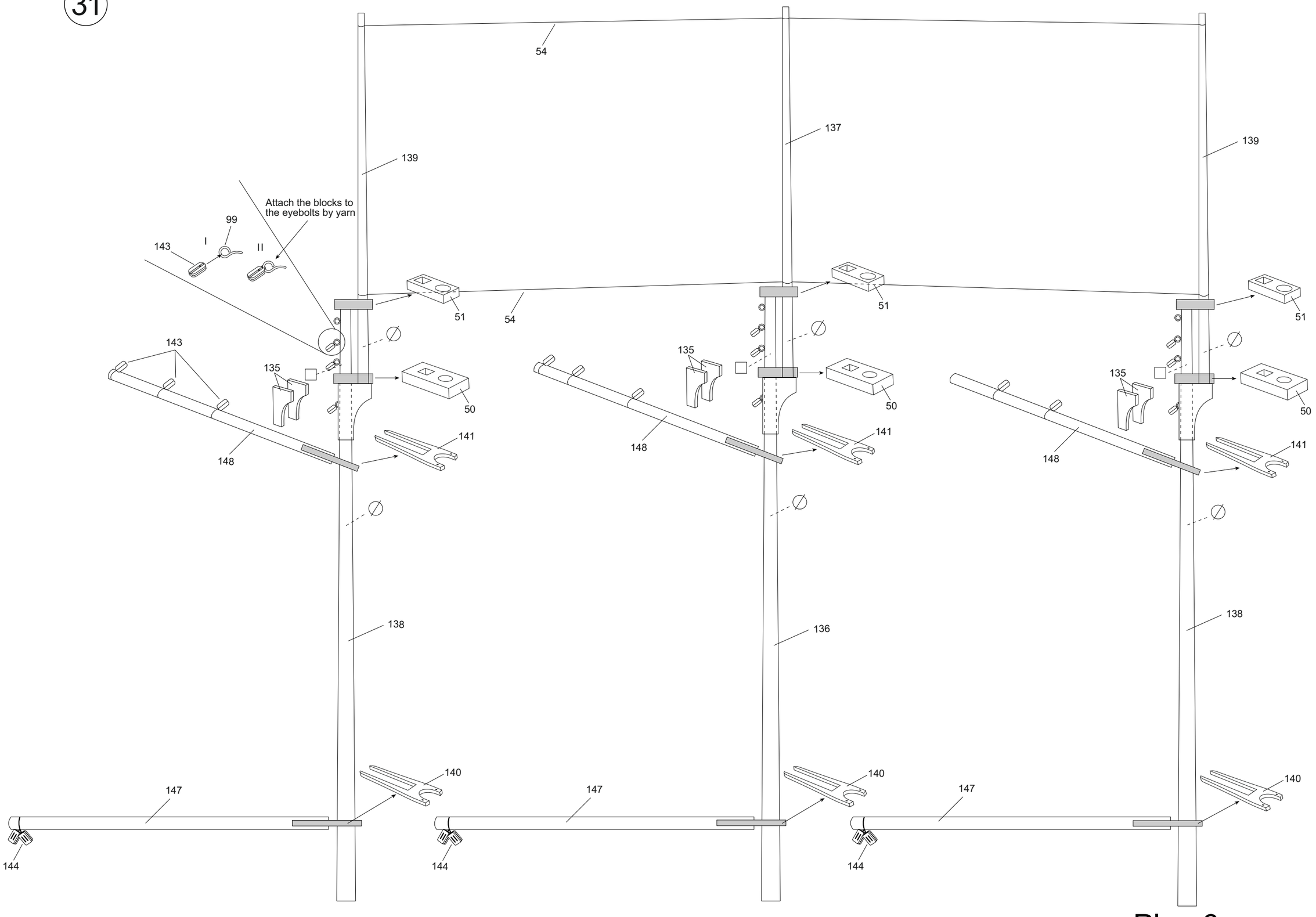
54
139
137
139
Attach the blocks to
the eyebolts by yarn
99
143
I
II
51
54
51
51
143
135
135
135
50
50
50
141
141
141
148
148
148
138
136
138
140
140
140
147
147
147
144
144
144

Vega

32

A B C D

142

Deadeye connection

2 mm

102

44

33

153

128

60 mm

50 mm

129

C16L C15L C14L C13L C12L

C11L C10L C9L C8L C7L C6L

C5L C4L C3L C2L C1L

D3L D2L D1L

99

D3R D2R D1R

101

VEGA

L : Left
R : Right

34

149

150

151

152

54

C16L

C11L

C5L

Make the ties
stronger by glue

130

143

105

104

103

130 mm

80 mm

80 mm

10 mm

146

L : Left
R : Right

Plan 7

Vega

35

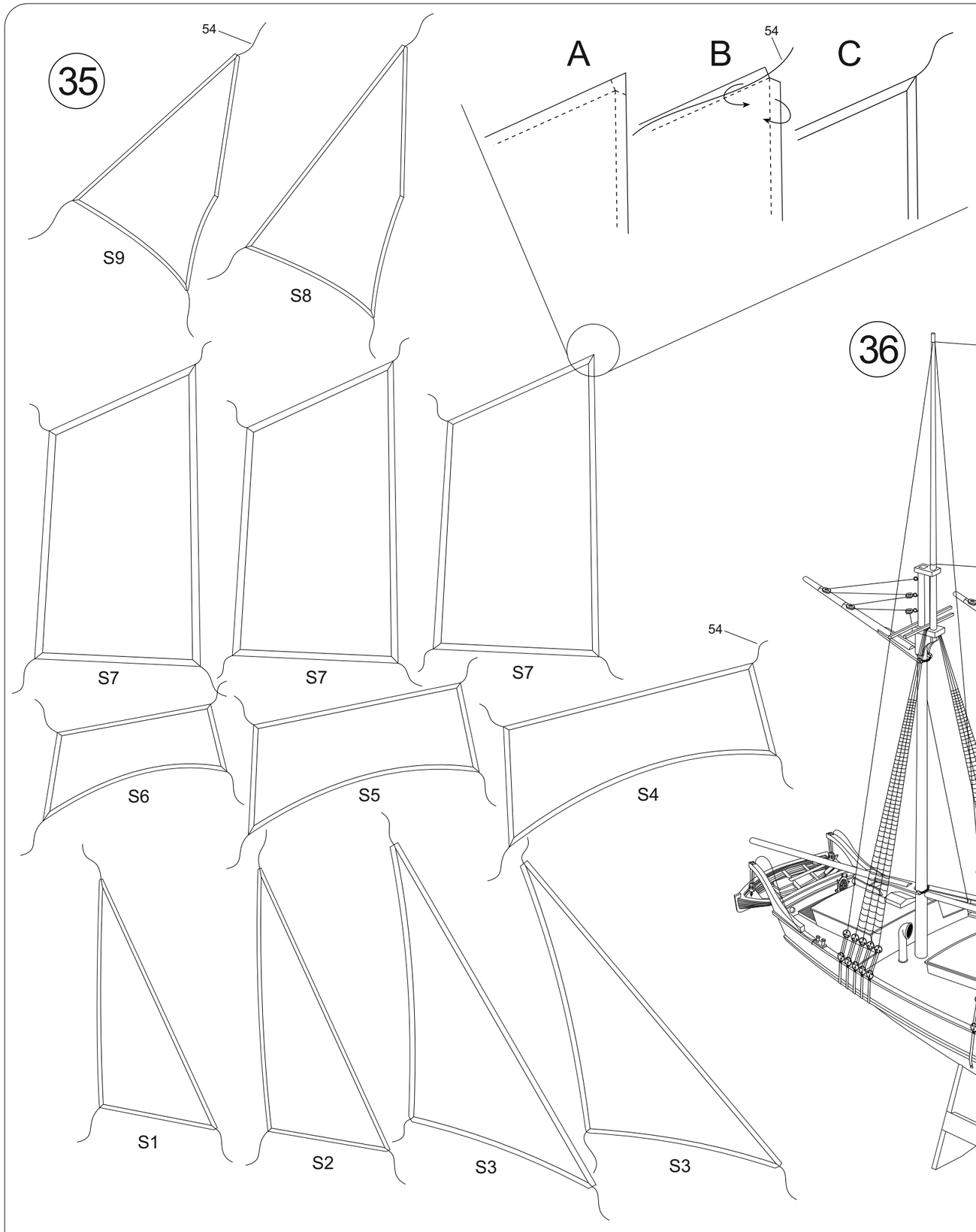

Fold and sew or glue the edges of the sails.
by passing the yarn through.

Do ironing the sails before attach to the model.

36

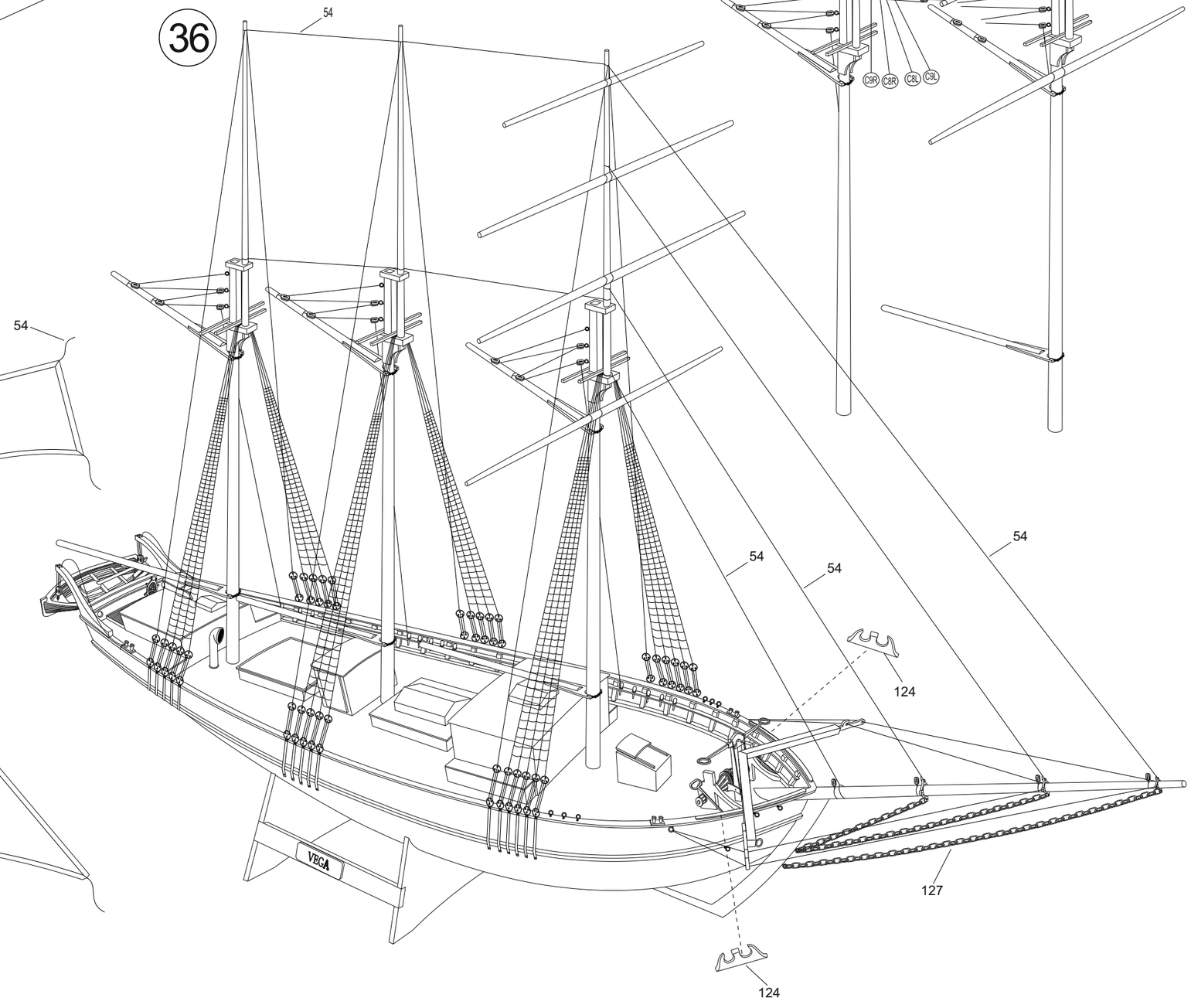

37

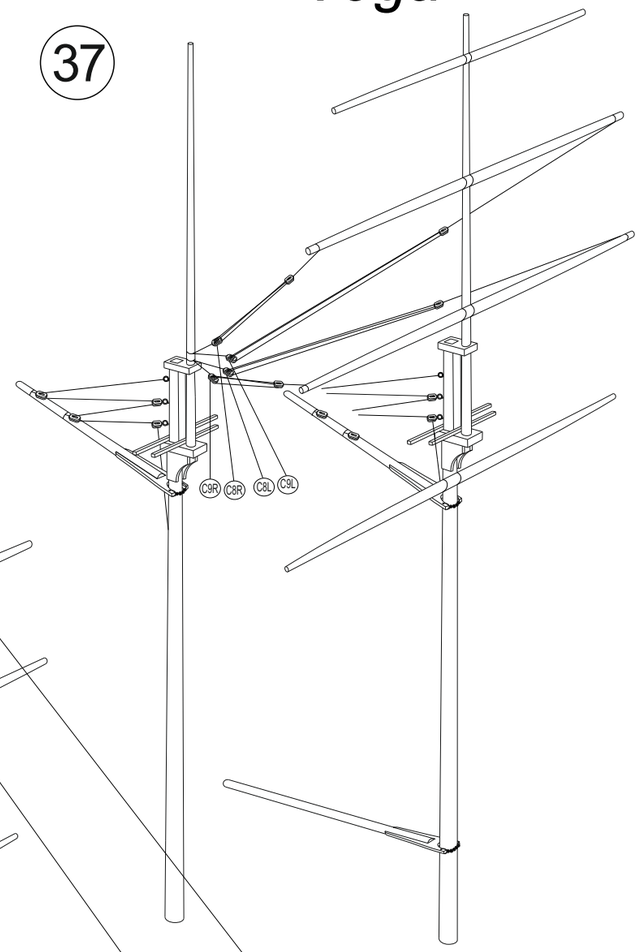

Plan 8

38

Detail of sail sewing.

S6

S7

S7

S7

C4L

C4R

39

S5

C3R

C3L

40

S4

C2R

C2L

D3

D2

D1

D11R

D10R

D9R

131

102

43

129

41

C1R

131

Right

132

Left

42

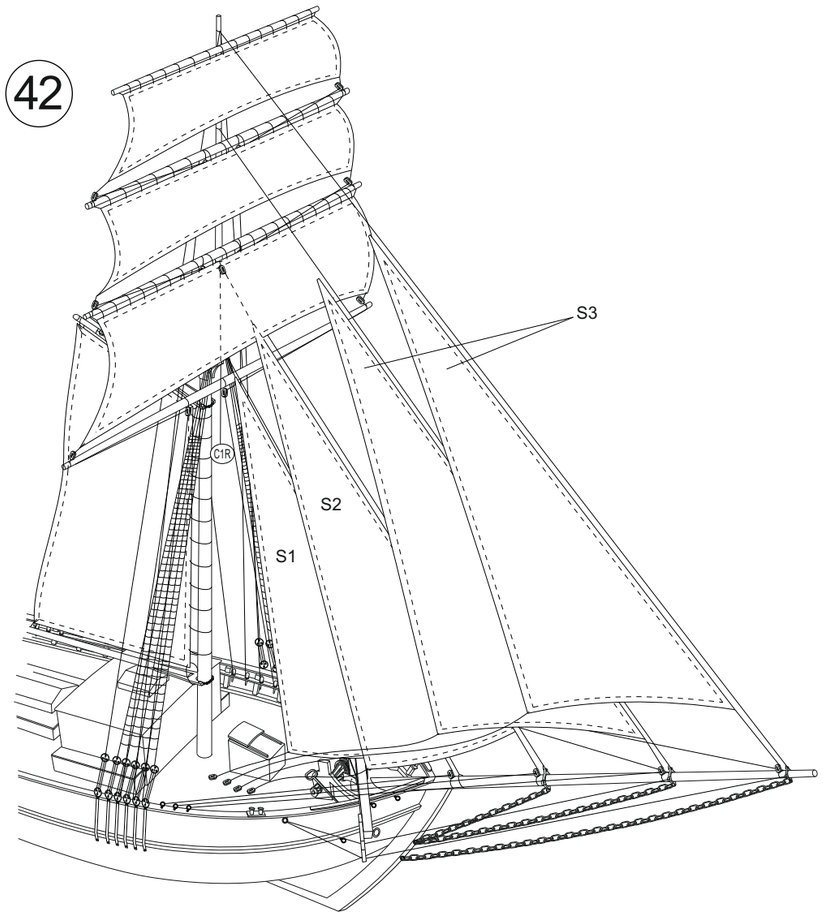
S3
C1R
S2
S1

43

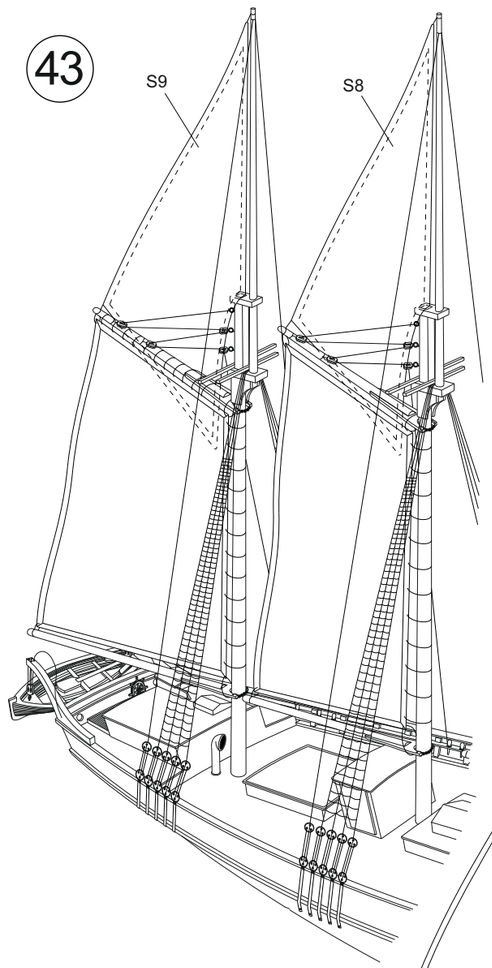
S9
S8

44

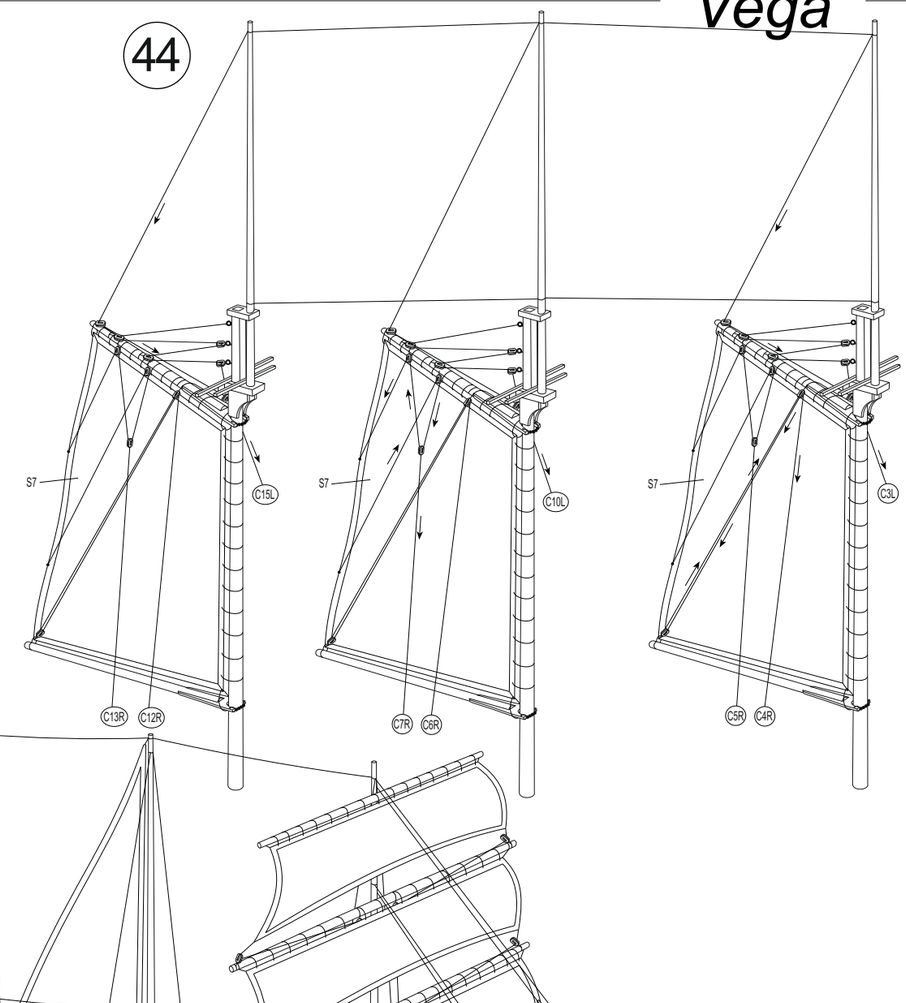
S7
C15L
S7
C10L
S7
C3L
C13R
C12R
C7R
C6R
C5R
C4R

45

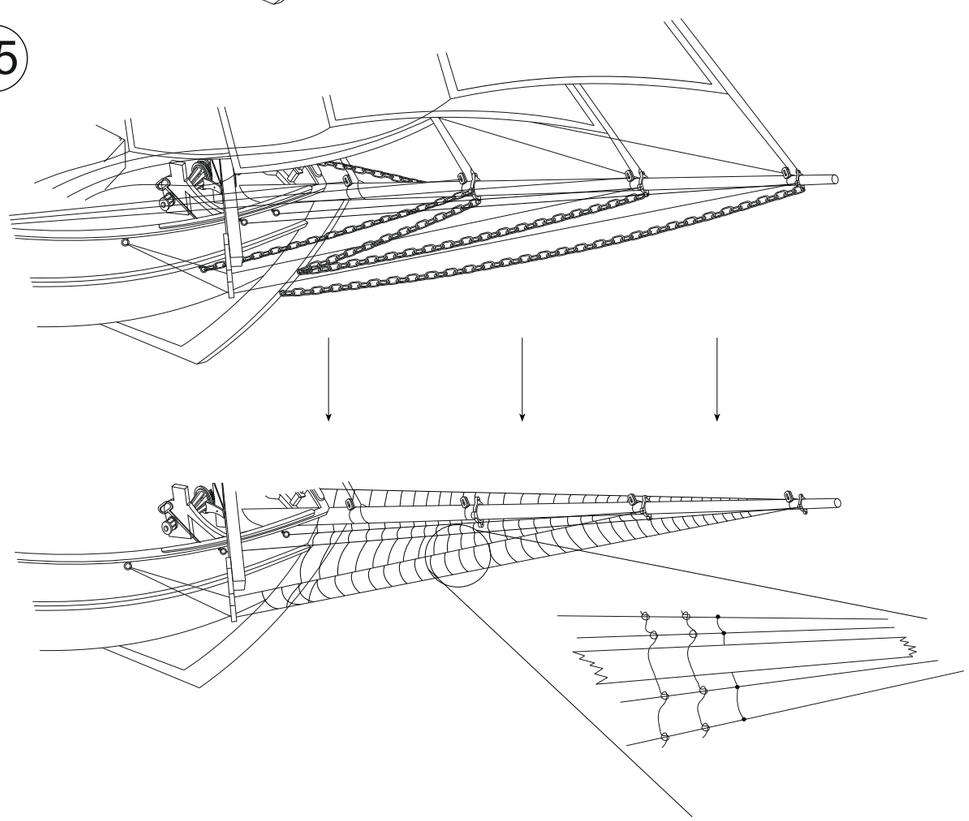

ASISTANT GUIDE

- Please read the instructions carefully before you start to build your model. Take notes if needed. So, you may find out the materials and the tools those you need.
- Use model knife to take out the parts the plywood sheets. Do not take them out with hand!
- Change of temperature effects on plywoods quickly. So that, do not release the plywoods. Keep them on a flat surface by putting weight on them.
- You may stick together the wooden parts easily if you sand the brown areas caused by laser with sand paper.
- You should use super glue and white glue to stick together the wooden parts and use the super glue for metal parts.
- Building the keel of your model, before stick the frames, be sure the frames properly seated on the keel. Otherwise you can't build the body of the model rightly. Exactly be sure that left and right side of the frames are compatible and symmetrical.
- After building the keel of your model, before the covering, you should test the frame edges by a cover strip. You should sand with a piece of sandpaper the frame edges at the right degree to touch the strips on to the surface exactly. The curves are mostly the front and back side of the body.
- You should keep the strip tips in the bowl filled with water approximately one hour. So that you may curve the strips on the curves easily these are mostly at the end and the front of the hull.
- You should cover the strip starting from the top for each side symmetrically.
- You should cut the upper side of the strip when overlap occurs especially at the front curve of the body.
- To make equal the surface of the body that caused by planking, you should sand with a piece of sandpaper (Firstly you should use thick sandpaper, then you can apply thin sandpaper), . You should fill the gaps after this processing. You may use leftover strips for wide gaps and model putty for small gaps.
- If you don't want to appear wooden tissue of the body of your model body; first, apply filler undercoat then sand with a thin sandpaper to make it ready to apply putty. Apply putty whole body and sandpaper again. Apply one more coat filler undercoat and sandpaper. You should not use very thick sandpaper to sand the putty and filler undercoat. You should repeat this process until you get the results as you want. You should apply undercoat paint to find out if any mistake appears at the body. The body gets ready for painting after these applications. You may use model brushes for filler coating. In order to understand whether the materials (such paint, filler, undercoat, varnish, etc.) are compatible with each other, you should test on the unnecessary parts.
- Some of the model's logo, name or the number are produced from decal paper. You should keep them in a bowl filled with warm water for two or three minutes. You should apply them to their places while releasing from their paper. You may attach easily If you apply gloss varnish to the place before applying the decals. You may apply matt, gloss or satin varnish after this application preferably.
- You should keep your model away from direct sunlight, heat and moist to avoid deformation in the course of time.

TÜRKMODEL

VEGA PART LIST-V3

www.turkmodel.net

www.facebook.com/turkmodel

NO	ITEM	DESCRIPTION	SIZE	TYPE
1-2	*2*	Keel	4 mm	*Plywood*
3...15	*13*	Frames	4 mm	*Plywood*
16-17	*4*	Set square parts	4 mm	*Plywood*
18	*3*	Post houses	4 mm	*Plywood*
19-20-21	*4*	Front cabin parts	4 mm	*Plywood*
22-23	*4*	Front hold parts	4 mm	*Plywood*
24-25	*4*	Middle cabin parts	4 mm	*Plywood*
26-27	*4*	Back hold parts	4 mm	*Plywood*
28-29	*3*	Back cabin parts	4 mm	*Plywood*
30	*1*	Rudder	4 mm	*Plywood*
31	*-*	Glass	-	*Clear sheet*
32	*62*	Cover strips	1,65x5x720 mm	*Basswood*
33	*1*	Main deck	1,3 mm	*Plywood*
34	*1*	Back deck	1,3 mm	*Plywood*
35	*85*	Deck and cabin cover strips	0,5x4x380 mm	*Ayous*
36	*4*	Rudder hinges (male-female)	-	*3D print-out resin*
37-38	*4*	Rail vertical laths houses	4 mm	*Plywood*
39-40-41	*4*	Base parts	4 mm	*Plywood*
42	*10*	Rail vertical laths-long	4 mm	*Plywood*
43	*38*	Rail vertical laths-short	4 mm	*Plywood*
44	*34*	Nails	-	*Nails*
45	*2*	Support parts of top rails	4 mm	*Plywood*
46	*2*	Houses of belaying pins	1,3 mm	*Plywood*
47-48-49	*5*	Rail parts	1,3 mm	*Plywood*
50	*3*	Post connectors-large	4 mm	*Plywood*
51	*3*	Post connectors-small	4 mm	*Plywood*
52	*2*	Laths	2x2,5x740 mm	*Basswood*
53	*1*	Bell	-	*3D print-out resin*
54	*1*	Rope	-	*Yarn*
55…58	*5*	Entrance parts of back cabin	1,3 mm	*Plywood*
59…62	*24*	Top windows of the cabins	1,3 mm	*Plywood*
63	*1*	Back hold lid	1,3 mm	*Plywood*
64	*2*	Middle cabin doors- left and right	1,3 mm	*Plywood*
65	*1*	Roof part of the middle cabin	1,3 mm	*Plywood*
66	*1*	Top part of the front hold	1,3 mm	*Plywood*
67…70	*14*	Windows parts of the front hold	1,3 mm	*Plywood*
71	*1*	Roof of the front cabin	1,3 mm	*Plywood*
72	*1*	Door of the front cabin	1,3 mm	*Plywood*
73	*1*	Wire	0,5x1000 mm	*Wire*
74	*4*	Rail support parts of rope tie	1,3 mm	*Plywood*
75-76-77	*4*	Rudder deck parts	1,3 mm	*Plywood*
78	*2*	Hanger of lifeboats	Ready	*Wooden*
79-80	*2*	Back rail parts	1,3 mm	*Plywood*
82…86	*12*	Chest parts of the front cabin	1,3 mm	*Plywood*
87…92	*8*	Winch cabinet parts	1,3 mm	*Plywood*
93-94-95	*4*	Stand parts of the rudder wheel	1 mm	*Plexy-glass*
96	*1*	Rudder wheel	-	*3D print-out resin*
97	*2*	Row handle	Ready	*Wooden*

VEGA PART LIST

NO	ITEM	DESCRIPTION	SIZE	PART TYPE
98	*2*	Row	Ready	*Wooden*
99	*50*	Eyebolt	Ready	*Metal*
100	*4*	Porthole	Ready	*Metal*
101	*1*	Air entrance pipe	-	*3D print-out resin*
102	*2*	Sheet for the chain plates	6x6 cm	*Aluminium sheet*
103	*1*	4-hole ring-small	-	*3D print-out resin*
104	*1*	4-hole ring-medium	-	*3D print-out resin*
105	*1*	4-hole ring-large	-	*3D print-out resin*
106	*2*	Anchor hangers	4x4x57 mm	*Basswood*
107	*1*	Winch shaft	3x70 mm	*Wire*
108	*1*	Winch gears	-	*3D print-out resin*
109	*2*	Winch disc parts	1 mm	*Plexy-glass*
110…113	*38*	Winch parts-2 sets	1,3 mm	*Plywood*
114	*2*	Winch stands	Ready	*Wooden*
115	*1*	Stand of the winch handles	6x10x28 mm	*Basswood*
116-117-118	*3*	Winch main parts	-	*3D print-out resin*
119	*2*	Winch bottom parts	1 mm	*Plexy-glass*
120	*2*	Winch arms	1 mm	*Plexy-glass*
121	*2*	Winch parts	1 mm	*Plexy-glass*
122	*30*	Hangers of the holds	Ready	*Plexy-glass*
123	*4*	Double-head bollards	-	*3D print-out resin*
124	*2*	Triple-head bollards	-	*3D print-out resin*
125	*2*	Anchor	-	*3D print-out resin*
127	*-*	Chain	120 cm	*Metal*
128	*1*	Post laths	2x2x400 mm	*Mahogany*
129	*36*	Belaying pins	Ready	*Walnut*
130	*2*	Rope connector part of the bowsprit	1 mm	*Plexy-glass*
131-132	*2*	Board lights	-	*3D print-out resin*
135	*6*	Support parts of the post connectors	1,3 mm	*Plywood*
136	*1*	Main post-bottom	6x9x450 mm	*Dowel conic*
137	*1*	Main post-top	3,5x6x260 mm	*Dowel conic*
138	*2*	Front and back posts-bottom	6x9x425 mm	*Dowel conic*
139	*2*	Front and back posts-top	3,5x6x250 mm	*Dowel conic*
140	*3*	Boom forks-large	Ready	*Wooden*
141	*3*	Boom forks-small	Ready	*Wooden*
142	*68*	Deadeyes	Ready	*Walnut*
143	*75*	Single-hole blocks	Ready	*Walnut*
144	*25*	Double-hole blocks	Ready	*Walnut*
145	*2*	Nametag	1,3 mm	*Plywood*
146	*1*	Bowsprit	5x9x300	*Dowel conic*
147	*3*	Boom-bottom	7x165 mm	*Dowel*
148	*3*	Boom-top	5x150 mm	*Dowel*
149	*1*	Horizantal front post boom	5x210 mm	*Dowel*
150	*1*	Horizantal front post boom	5x275 mm	*Dowel*
151	*1*	Horizantal front post boom	6x300 mm	*Dowel*
152	*1*	Horizantal front post boom	7x350 mm	*Dowel*
153	*60*	Beads	Ready	*Plastic*
S1…S9	*12*	Sails	Ready	*Fabriq*
F1	*1*	Lifeboat keel	1,3 mm	*Plywood*
F2…F12	*12*	Lifeboat parts	1,3 mm	*Plywood*